TERMINATION POINTS				
		CONNECTIONS		
POS.	DESCRIPTION	SIZE	RATING CLASS	FLANGES ACCORDING TO ANSI B 16.5
50	UNTREATED CRUDE OIL INLET FROM HEATER	4"	150LBS	X
51	TREATED CRUDE OIL OUTLET	3"	150LBS	X
52	RETURN OF UNTREATED CRUDE OIL	3"	150LBS	X
53	EFFLUENT WATER	1/2"	PN16	X
54	OILY SLUDGE OUTLET	2"	150LBS	X
55	VENT	2"	150LBS	
56	NITROGEN	1/2"	150LBS	X
58	COMPRESSED AIR	1/2"	150LBS	X
59	WATER INLET	1"	150LBS	X

DO NOT DISCHARGE THE OILY SLUDGE INTO THE PUPLIC SEWAGE SYSTEM!

COUNTER FLANGES, GASKETS, BOLTS AND NUTS ARE INCLUDED IN THE SCOPE OF SUPPLY

THE VENT AIR CONTAINS OIL MIST AND VAPORS.
EACH VENTILATION PIPE (CONNECTION 15) HAS TO BE INDIVIDUALLY ROOTED OUTSIDE THE BUILDING.

INSULATION: OIL PIPES:
PIPES AND VALVES WILL BE INSULATED

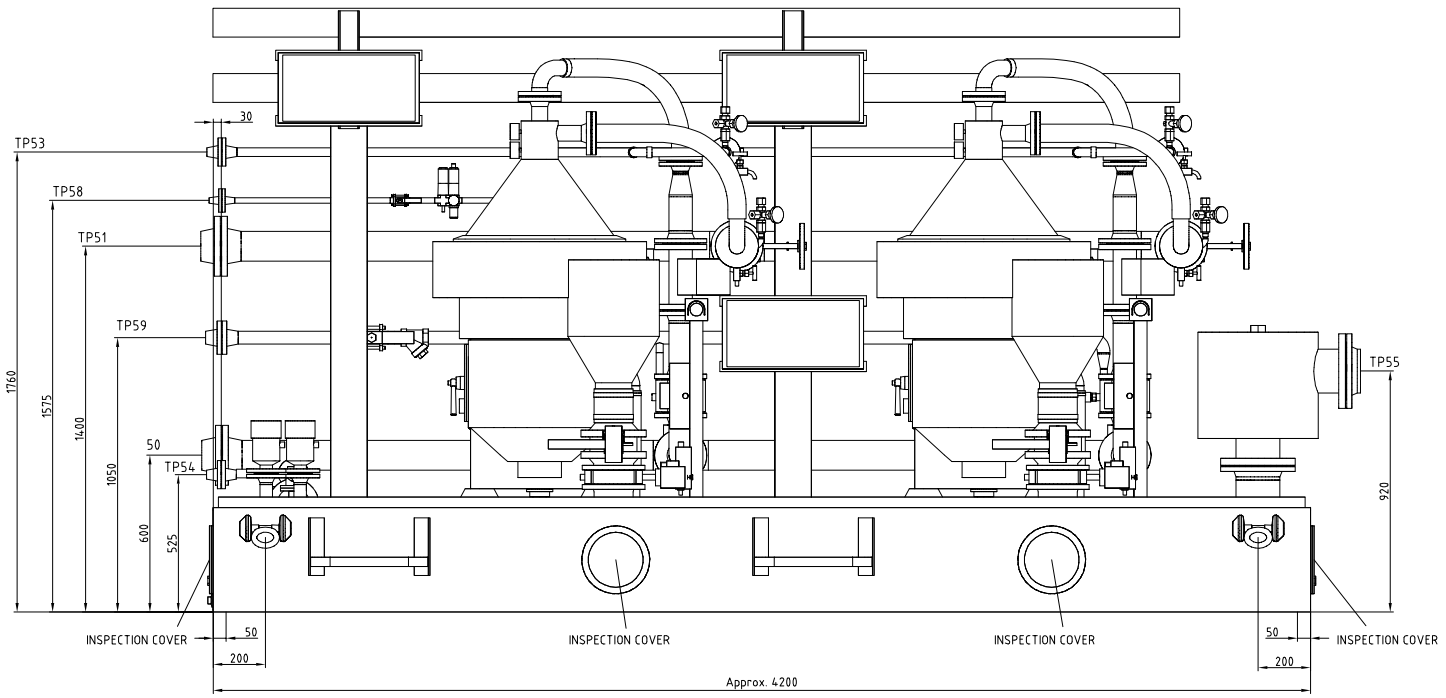

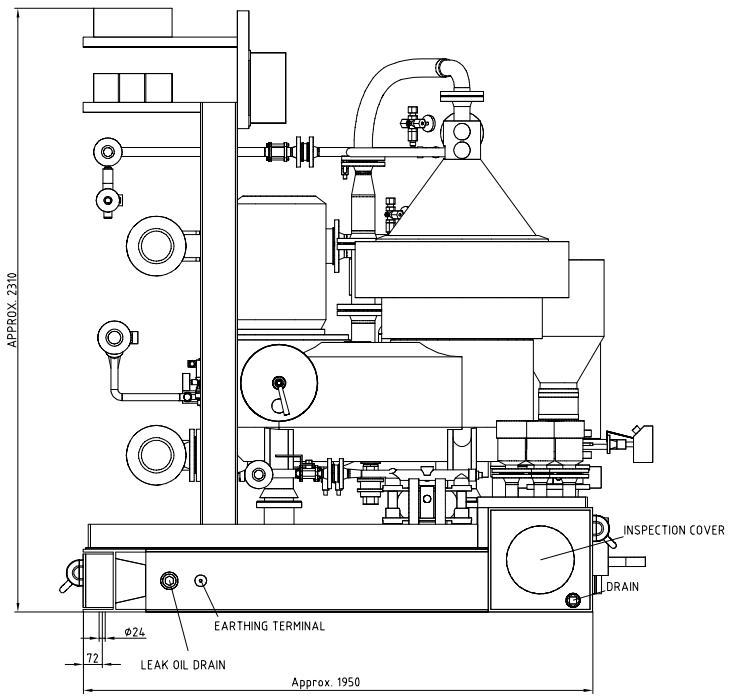

A HOIST SHOULD BE INSTALLED ABOVE THE SEPARATOR SO THAT THE HEAVY BOWL PARTS CAN BE HANDLED MORE EASILY.
THE HOIST SHOULD BE MOUNTED ON A RUNNING RAIL SO THAT BOWL PARTS CAN BE MOVED FROM SEPARATOR TO A WORKBENCH.
Um die schweren Trommelteile besser handhaben zu können, wird empfohlen, über dem Separator ein Hebezeug anzubringen.
Das Hebezeug soll an einer Laufschiene befestigt sein, so daß die Trommelteile auf einem Arbeitstisch abgesetzt werden können.

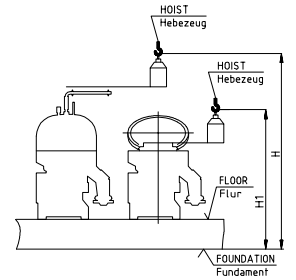

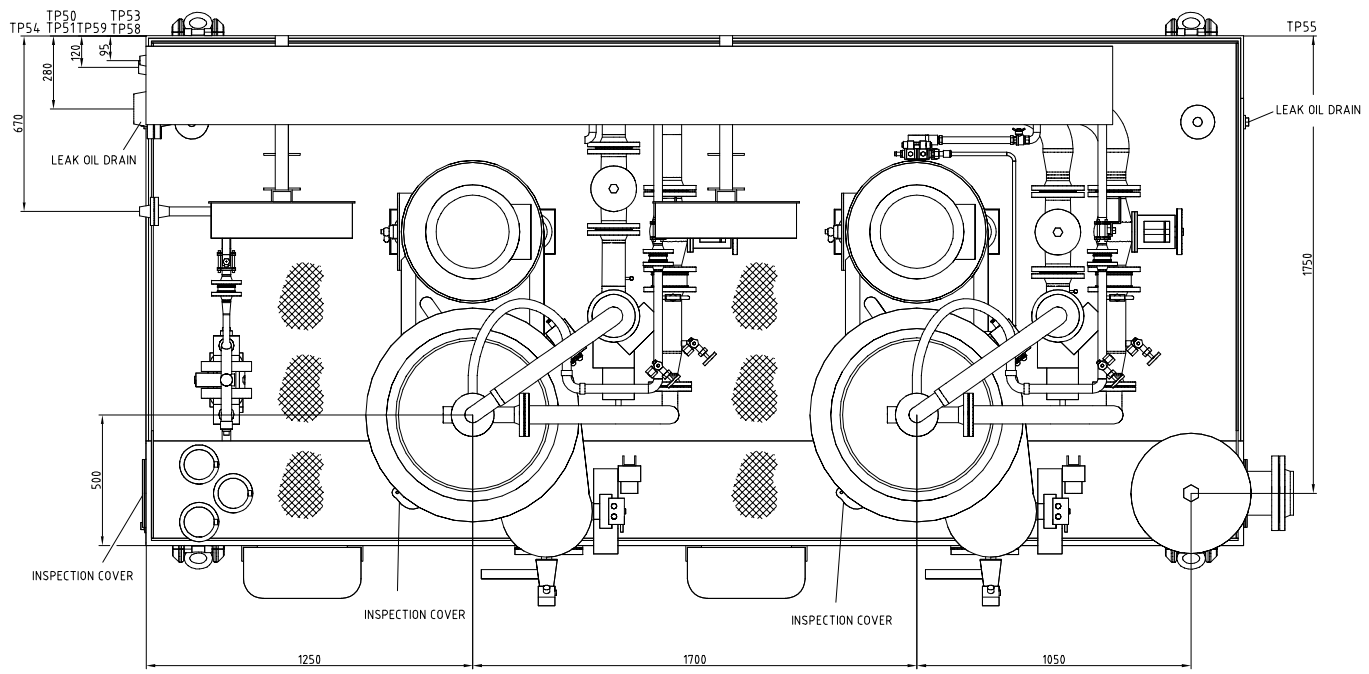

MAINTENANCE AREA
Wartungsfläche

EXAMPLE FOR TRANSPORTATION!

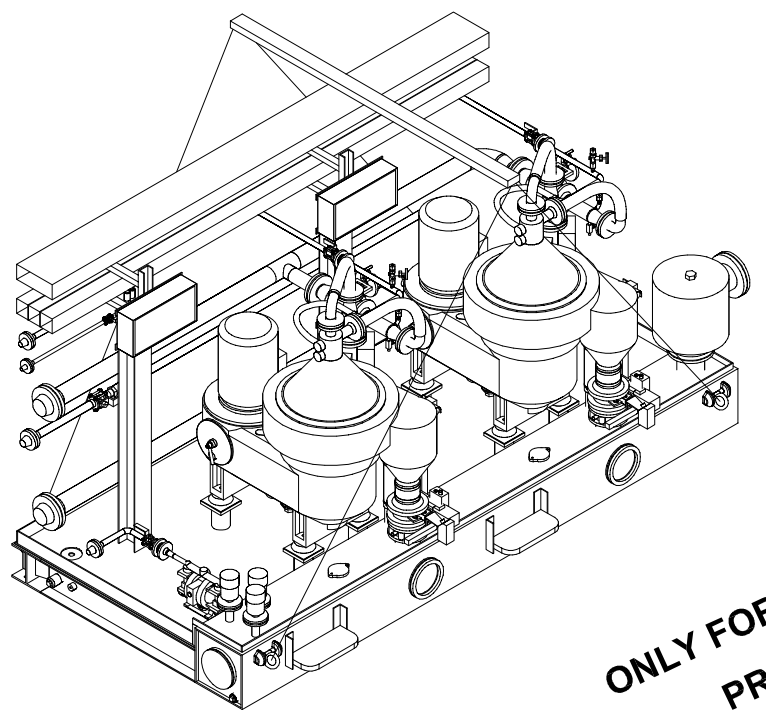

ONLY FOR INFORMATION
PRELIMINARY

FOR OPERATION OF THE EQUIPMENT PLEASE NOTE THE RESPECTIVE LOCAL SAFETY REQUIREMENTS

SUBJECT TO TECHNICAL MODIFICATIONS

Revision	Description of Revision	Rev.-Date	Rev.-Name

Client: RMNTK
Location: Krasnodar
Country: Russia

Revision proof is electronically stored
Created: Date 12.09.2012 Name GOEMUC
Checked:
Approved:

Copyright reserved We reserve all rights on this drawing

GEA Westfalia Separator
D-59302 Oelde

CAD-Drawing

Description: 2151_30001747_RMNTK
Layout Drawing
Crude Oil Separator Double Unit OCU
2 x OSE 80-01-537

Last modified on: 25.09.2012
Last modified by: GOEBYC
Drawing-No.: Q30001747-9938-LAY003
Scale: 1:10 Sheet / Sheets: 01 01 Size: A0

printed on 26.09.2012 for GOEBYC